E128 Hermetic
BCS 5 STELLE

**A stove with a linear design cladded in Steel with a Majolica top. It provides heat via natural convection and radiation. Available in Bianco or Nero Opaco. Adjustable, front hot air vent Available with the BCS System and in an airtight version with combustion air drawn from the outside. **

GENERAL FEATURES

•Heating: Optional HSS Storage / Natural convection /Ductable forced ventilation
•Front ventilation: adjustable vent on version with Multifuoco System®
•Cladding: steel
•One-piece firebox: airtight in steel
•Firebox: Aluker®
•Flue gas deflector / Brazier: Aluker® / cast iron
•Door / Handle: cast iron with ceramic glass resistant to 750°C / steel and silicone
•Removable ash pan: yes
•Humidifier: optional
•Standard flue outlet position: top or rear
•Pre-heated primary and secondary air: by electronic control
•Pre-determined tertiary air: pre-heated
•Glass cleaning: continuous air flow
•Burn Control System: yes
•HSS Heat Storage System: optional
•Ash vacuum cleaner: optional
•Installation: wall - corner

TECHNICAL DETAILS

•Energy efficiency class A+
•Rated output max kW 11,0
•Rated efficiency power % 87,2
•Rated consumption max kg/h 2,8
•Weight kg 236
•Stove weight with HSS kg 262
•Standard flue outlet Ø cm 15
•Model E128 BCS

COVERS

BIANCO

NERO OPACO

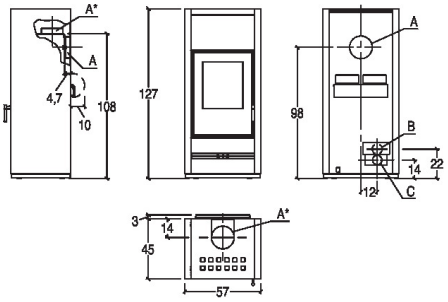

A	B	C
15 cm	7.5 cm	7.5 cm

PIAZZETTA
PASSIONE ACCESA